PAPER SIZE	CATALOG NUMBER
B	D6567

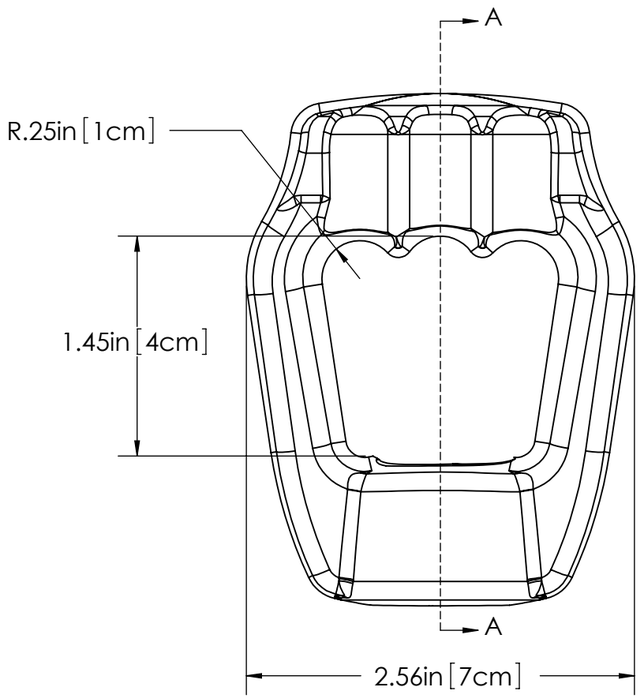

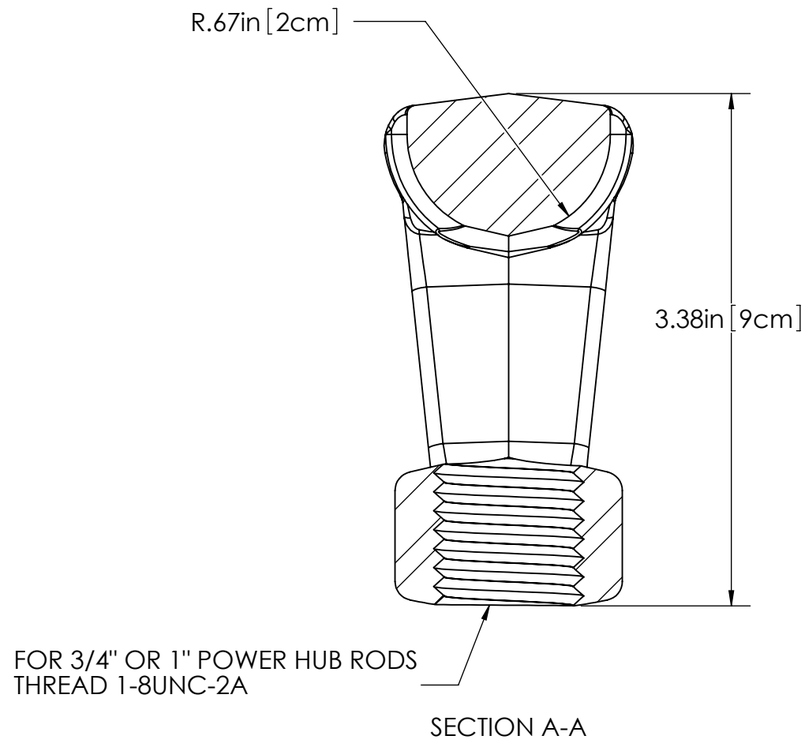

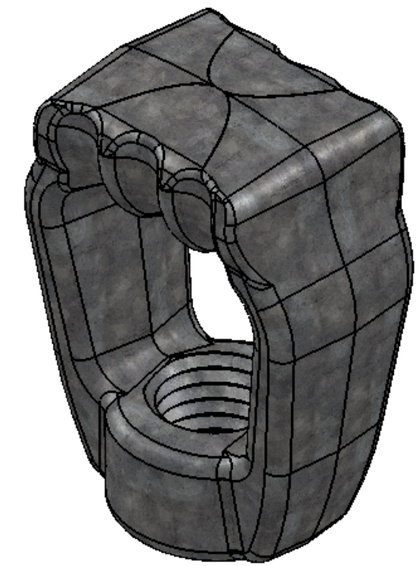

NOTES:

1.HOT DIP GALVANIZE PER ASTM A153, AFTER FABRICATION

2. EYENUT RATED AT 36,000 lbf [160,000N] ULTIMATE.

This drawing contains confidential information that is the property of MacLean Power, L.L.C. ("MacLean"). Use of MacLean's confidential information without MacLean's express written consent is strictly prohibited and may expose you you to legal liability. If you believe that you received this material in error, please destroy it or return it to "MacLean Power, L.L.C., 11411 Addison Street, Franklin Park, Illinois 60131, "USA."

MACLEAN POWER SYSTEMS
www.macleanpower.com

DRAWING NUMBER:	D6567
SHEET NAME: SHEET1	1 OF 1
PRODUCT DESCRIPTION	TRIPLE GUY EYENUT FOR 3/4" OR 1" DIAMETER POWER HUB ROD
DRAWN BY: CRL	DATE: 3/13/12